EZ 425W – 8,5mm (1/3") Outdoor Day / Night Camera with WDR and IR LED

Features

- High resolution technology (600 TV lines)
- 36 powerful IR LED
- IR range 10 ~ 25 m
- WDR - Wide Dynamic Range
- HLC- Highlight Compensation for masking of highlights
- Multiline OSD with key control at camera back panel
- Built-in varifocal lens (zoom/focus outside adjustable)
- Automatic or manual day/night control
- 8 adjustable privacy zones
- 2 zone motion detection with adjustable sensitivity
- IP65 weatherproof outdoor housing
- Integrated wall bracket

Technical data	
Sensor	8,5mm (1/3") SONY IT CCD
Picture element	752 x 582 (PAL)
Horizontal resolution	600 TV lines
Sensitivity	0,3 lux (colour mode) / 0 lux (b/w mode)
IR illumination	36 IR LED
Recommended object distance	10 ~ 25 m* (depending on reflections in scenery)
S/N ratio	> 60 dB (AGC off)
Gamma correction	0,05 ~ 1 adjustable
On-screen display	Multiline OSD with key control (camera back panel)
Day/night control	Automatic (adjustable delay and level on/off) / manual
Lens	Varifocal lens 3~8mm (zoom/focus outside adjustable), F = 1.4, fix Iris
Horizontal field of view	76° (f=3mm) ~ 33° (f=8mm)
Electronic shutter	1/50 ~ 1/100.000, automatic / manual / flickerless
BLC - Back light compensation	BLC with adjustable level and adjustable BLC area)
HLC - Highlight compensation	Masking function for highlights in scenery with adjustable trigger level
WDR - Wide Dynamic Range	Digital WDR function with adjustable level
Parking lines	Overlay display of parking lines, adjustable in size and perspective
White balance	ATW / One push AWC / Indoor / Outdoor / manual
AGC	Automatic
Camera title	On (15 characters, adjustable position) / off
Privacy zones	On / off (8 zones, adjustable position / size / color)
Motion detection	On (2 adjustable zones, adjustable sensitivity) / off
Horizontal mirror	On / Off
Picture adjustment	Brightness / contrast / red/blue gain
Video output	BNC VBS, 1 Vp-p / 75 Ohm
Synchronisation	Internal
Weatherproof rating	IP 65
Power source	12 V DC +/- 0,5V
Power consumption	0,15 A (IR off) max.; 0,55 A (IR on) max.
Ambient temperature	-20°C ~ +50°C
Dimensions (WxHxD)	77 x 75 x 142 mm (with sunshield / w/o bracket)
Weight	980 g

* The IR illumination range depends on the location, particularly with regard to the reflection of the installation's surroundings. Locating the device near to highly absorbent surfaces can result in a significantly reduced range.

Technical data are subject to change without prior notice.
Misprints reserved.

EverFocus®
Focused on you!

Dimensions

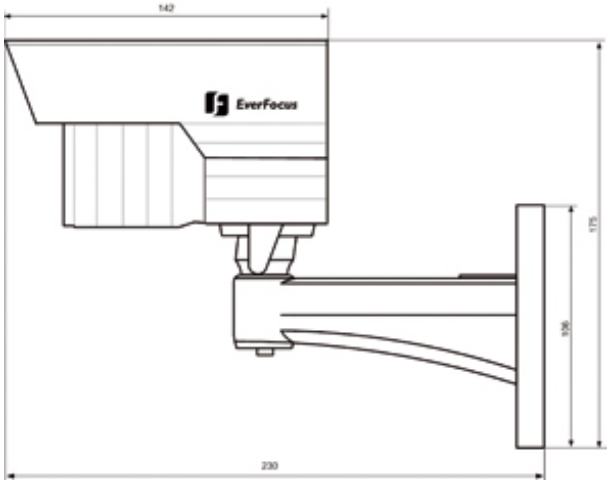

Ordering information

EZ 425W / P V1	8,5mm (1/3") Outdoor WDR Day / Night Camera with IR LED, 600 TV lines, IP65, 3~8mm DC varifocal lens, 12 V DC
AP12D152E1	Power supply, 230 V AC / 12 V DC, 1.500 mA

Technical data are subject to change without prior notice.
Misprints reserved.

EverFocus®
Focused on you!